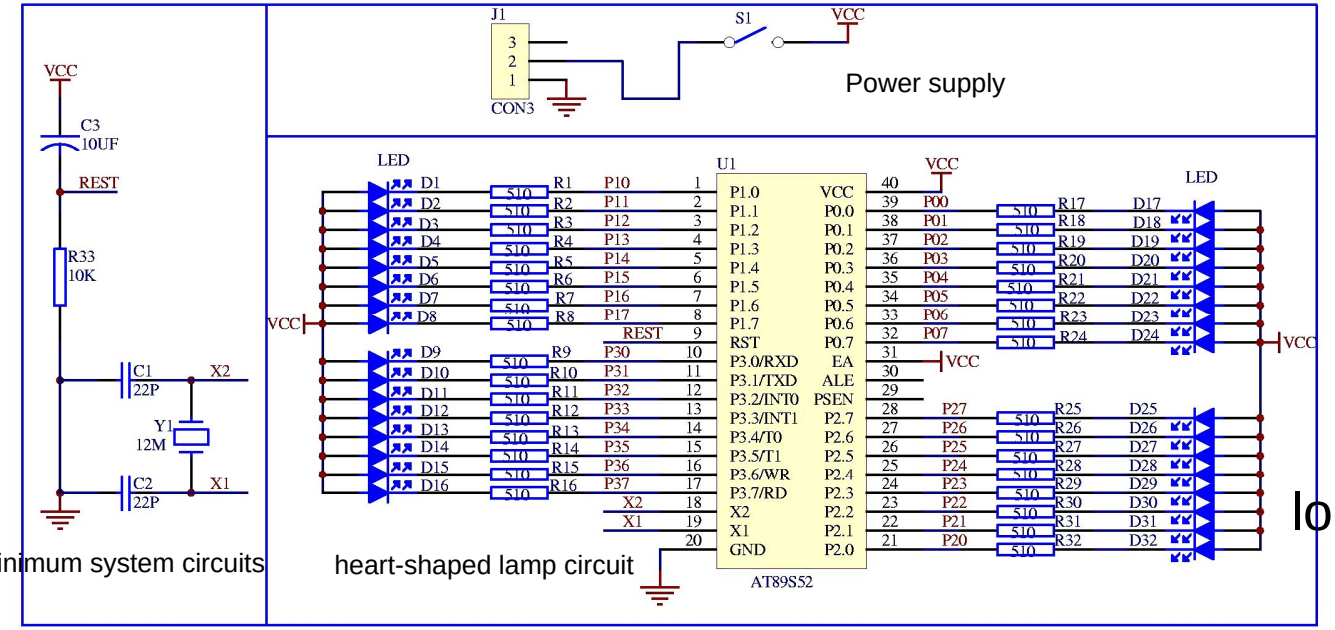
VCC
C3
10UF
REST
R33
10K
C1
22P
X2
Y1
12M
C2
22P
X1
J1
CON3
S1
VCC
Power supply
LED
U1
AT89S52
P1.0
P1.1
P1.2
P1.3
P1.4
P1.5
P1.6
P1.7
RST
P3.0/RXD
P3.1/TXD
P3.2/INT0
P3.3/INT1
P3.4/T0
P3.5/T1
P3.6/WR
P3.7/RD
X2
X1
GND
VCC
P0.0
P0.1
P0.2
P0.3
P0.4
P0.5
P0.6
P0.7
EA
ALE
PSEN
P2.7
P2.6
P2.5
P2.4
P2.3
P2.2
P2.1
P2.0
the minimum system circuits
heart-shaped lamp circuit

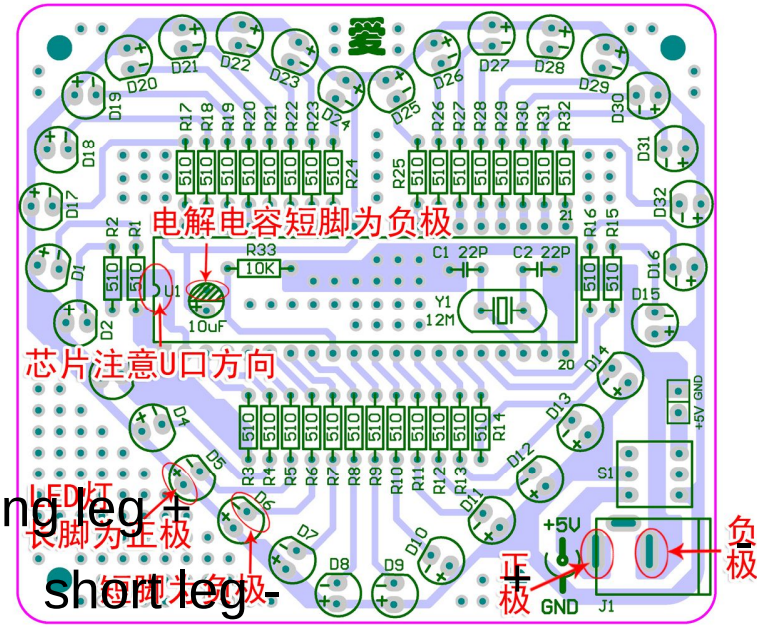
电解电容短脚为负极
芯片注意U口方向
LED灯
长脚为正极
短脚为负极
long leg +
short leg -
+5V
GND
正极
负极
J1
S1
Y1
12M
C1 22P
C2 22P
R33
10K
10uF